DCN Super Capacitors

FEATURES	Very fast charge/discharge – High power density – IEC 62391 compliant – Circuit board mountable
APPLICATIONS	Battery backup/ alternative – Pulse power – Energy harvesting – LED Displays – Mechanical actuators – Audio systems

Operating Temperature Range		**-40°C to +60°C**		
Storage Temperature		-40°C to +70°C		
Capacitance Tolerance @ 20°C		+30%/-10% (Q tolerance), +20%/-20% (M tolerance) +10%/-10% (K tolerance), +50%/-20% (S tolerance)		
Surge Voltage	**WVDC**	**2.7**	**5.5**	
	SVDC	**2.8**	**5.7**	
Maximum Current		**See standard part listing**		1 second discharge to ½ WVDC
Operating Current		**See standard part listing**		5 second discharge to ½ WVDC
Leakage Current		**See standard part listing**		72 hours,25°C
Life Time		**1000 hours with rated voltage applied at 60°C**		
		Capacitance change	±30% of initially measured values	
		ESR	≤200% of initially specified values	
		Leakage current	≤ specified maximum value	
Shelf Life		**500 hours with no voltage applied at 60°C**		
		Capacitance change	±30% of initially measured values	
		ESR	≤200% of initially specified values	
Life Cycles **(25°C) 1 cycle= Charge to WVDC for 20s, constant voltage charging for 10s, discharge to ½ WVDC for 20s, rest for 10 s**		**500,000 cycles**		
		Capacitance change	±30% of initially measured values	
		ESR change	≤200% of initially specified values	

D ≤ 18mm

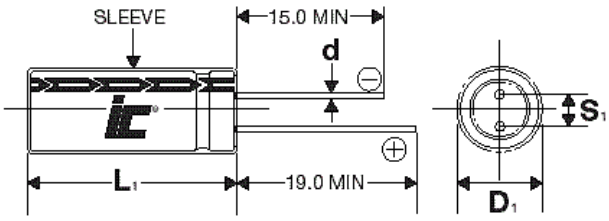

Lead spacing VS. Case diameter						
D	4	8(L<20)	8(L≥20)	10	16	18
S	1.5	3.5	3.5	5.0	7.5	7.5
d	0.45	0.5	0.6	0.6	0.8	0.8

L_1=L+1.5mm
D_1=D+05mm
S_1=S±0.5mm

ILLINOIS CAPACITOR
Your Global Source for World-Class Capacitors

North America
Tel: 847.675.1760
sales@illcap.com

Asia
Tel: 852.2793 0931
sales@illcap.com.hk

© 2017 Illinois Capacitor

DCN
Super Capacitors

Snap in types

D≥20mm

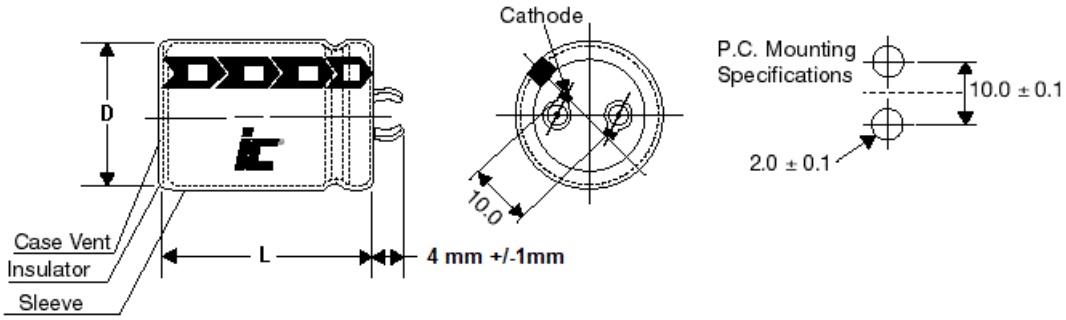

Capacitance = 400F

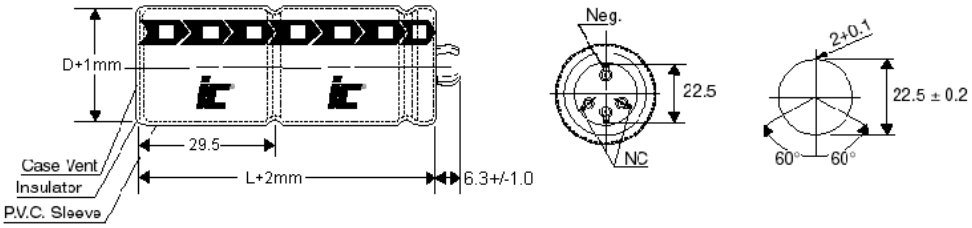

Capacitance = 500F to 650F

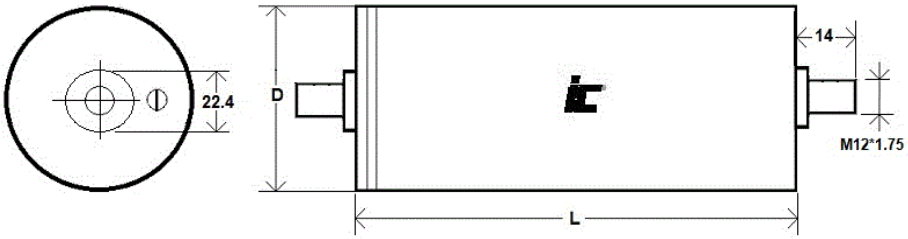

5.5 Volt units

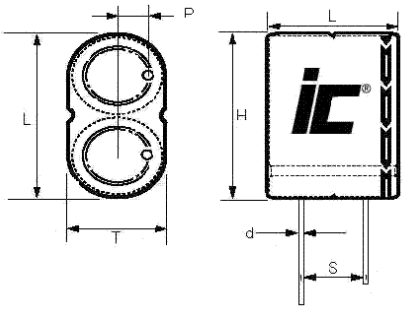

Capacitance (F)	Dims (LxHxT) (mm) +1.0mm	Lead spacing S (mm) +/-0.5mm	Lead diameter d (mm)
1	17x19.5x9	12.3	0.6
1.5	17.5x23.5x9	10.5	0.6
2	21.5x23.5x11	10.5	0.6
2.5	21.5x23.5x11	10.5	0.6

ILLINOIS CAPACITOR
Your Global Source for World-Class Capacitors

North America
Tel: 847.675.1760
sales@illcap.com

Asia
Tel: 852.2793 0931
sales@illcap.com.hk

© 2017 Illinois Capacitor

DCN

High pulse power, extends battery life

Capacitance (F)	WVDC	IC PART NUMBER	MAX Current (A)	Maximum Continuous Current (A) (ΔT=15°C)	Short Circuit Current (A)	ESR AC 1 kHz (mΩ)	DC ESR (mΩ) 20°C	Max stored energy (mWh)	LC (mA), (72 hrs)	Energy Density (Wh/kg)	Energy Volumetric Density (Wh/l)	Power Density (kW/kg)	Power Volumetric Density (kW/l)
0.3	2.7	304DCN2R7SCBB	0.5	0.2	1.8	1000	1500	0.30375	0.006	1.2	0.879	2.333	13.18
1.0	2.7	105DCN2R7S	0.73	0.4	3.17	400	850	1.0125	0.008	1.0771	1.6786	1.0949	1.7062
1.0	5.5	105DCN5R5M	1.42	0.36	6.11	600	850	4.2139	0.1	1.1571	1.3187	1.1109	1.2659
1.5	5.5	155DCN5R5M	4.125	0.65	11	320	500	6.3021	0.12	1.40046	1.70269	4.0333	4.9
2.0	2.7	205DCN2R7S	1.39	0.5	5.74	280	470	2.025	0.01	1.7609	2.5179	1.6185	2.3143
2.0	5.5	205DCN5R5M	2.81	0.85	11.74	300	470	8.4028	0.14	2.02	10.0899	11.2	5.96
2.5	5.5	255DCN5R5Q	5.09	1.1	13.75	220	400	10.5035	0.15	2.025	1.8218	5.3834	4.8431
3.0	2.7	305DCN2R7Q	2.31	0.8	10.8	160	250	3.0375	0.012	2.2668	3.0215	2.6113	3.4807
3.3	2.7	335DCN2R7MGJG	2.36	0	0	160	270	3.34125	0.014	1.6	2.127	1.58	2.063
4.7	2.7	475DCN2R7SGJG	2.92	0.9	10.8	140	250	4.7588	0.016	2.2134	3.0295	1.6275	2.2277
5.0	2.7	505DCN2R7Q	6.75	0.99	13.5	110	200	5.0625	0.015	2.025	3.2229	1.7496	2.7846
10.0	2.7	106DCN2R7M	5.87	1.4	20.7	80	130	10.125	0.03	3.3638	4.2972	2.2356	2.856
10.0	2.7	106DCN2R7STJD	5.63	1.4	19.3	80	140	10.125	0.03	2.5859	3.3002	1.5981	2.0367
22.0	2.7	226DCN2R7SKJD	10.3	0	0	40	85	22.275	0.06	2.9542	4.4315	1.365	2.0475
25.0	2.7	256DCN2R7Q	16.46	0	45	30	60	25.3125	0.049	7.54	5.0358	3.1654	4.1437
30.0	2.7	306DCN2R7M	14.5	2.7	45	30	60	30.375	0.07	3.7593	5.0358	1.8045	2.4172
50.0	2.7	506DCN2R7Q	22.5	4	675	25	40	50.625	0.16	3.061	4.9736	1.058	2.1486
100.0	2.7	107DCN2R7Q	35.5	5.8	96.4	18	28	101.25	0.3	4.6107	5.919	1.4227	1.8264
100.0	2.7	107DCN2R7SLB	35.5	0	0	20	28	101.25	0.3	5.0373	6.6315	1.5544	2.0463
150.0	2.7	157DCN2R7M	42.6	7	108	16	25	151.875	0.55	4.8522	5.6254	1.118	1.2961
200.0	2.7	207DCN2R7M	54	8.3	135	15	20	202.5	0.7	4.927	5.7296	1.0642	1.2376
250.0	2.7	257DCN2R7SDP	61.4	9.1	150	13	18	253.125	0.8	5.3289	6.5109	1.0297	1.2628
350.0	2.7	357DCN2R7M	90.9	0	0	10	12	354.375	1	5.0053	6.1388	1.0297	1.2628
400.0	2.7	407DCN2R7Q	93.1	0	225	10	12	405	1.2	5.7857	7.016	1.0414	1.263
500.0	2.7	507DCN2R7SEW	112	0	270	8	10	506.25	1.3	4.8214	5.5388	0.8331	0.9571
650.0	2.7	657DCN2R7SZZ	577	0	3370	0.65	0.8	658.125	2.3	3.3	3.879	5.468	6.446

© 2016 Illinois Capacitor
North America
Tel: 847.675.1760
sales@illcap.com

Asia
Tel: 852.2793 0931
sales@illcap.com.hk

DCN

High pulse power, extends battery life

Capacitance (F)	WVDC	IC PART NUMBER	Weight (grams)	Volume (mL)	Dims DxL LxHxT (mm)	Lead Spacing S (mm)	Lead Diameter d (mm)
0.3	2.7	304DCN2R7SCBB	2.012	0.0138	4x11	1.5	0.45
1.0	2.7	105DCN2R7S	0.94	0.603	8x12	3.5	0.5
1.0	5.5	105DCN5R5M	3.5	3.071	17.5x19.5x9	11.8	0.6
1.5	5.5	155DCN5R5M	4.5	3.701	17.5x23.5x9	8.3	0.6
2.0	2.7	205DCN2R7S	1.15	0.804	8x16	3.5	0.5
2.0	5.5	205DCN5R5M	5	5.558	21x24x11	15.5	0.6
2.5	5.5	255DCN5R5Q	5	5.558	22x24x11	10.5	0.6
3.0	2.7	305DCN2R7Q	1.34	1.005	8x20	3.5	0.6
3.3	2.7	335DCN2R7MGJG	2.09	1.005	10x20	5	0.6
4.7	2.7	475DCN2R7SGJG	2.15	1.571	10x20	5	0.6
5.0	2.7	505DCN2R7Q	2.5	1.571	10x20	5	0.6
10.0	2.7	106DCN2R7M	3.01	2.356	10x30	5	0.6
10.0	2.7	106DCN2R7STJD	3.91	3.068	12.5x25	5	0.6
22.0	2.7	226DCN2R7SKJD	7.54	5.027	16x25	7.5	0.8
25.0	2.7	256DCN2R7Q	7.54	5.027	16x25	7.5	0.8
30.0	2.7	306DCN2R7M	8.08	6.032	16x30	7.5	0.8
50.0	2.7	506DCN2R7Q	13.01	10.179	18x40	7.5	0.8
100.0	2.7	107DCN2R7Q	21.96	17.106	22x45	10	1.5
100.0	2.7	107DCN2R7SLB	20.1	15.268	18x60	7.5	0.8
150.0	2.7	157DCN2R7M	31.3	26.998	25x55	10	1.5
200.0	2.7	207DCN2R7M	41.1	35.343	30x50	10	1.5
250.0	2.7	257DCN2R7SDP	47.5	38.877	30x55	10	1.5
350.0	2.7	357DCN2R7M	70.8	57.727	35x60	10	1.5
400.0	2.7	407DCN2R7Q	70	57.7	35x60	22.5	1.5
500.0	2.7	507DCN2R7SEW	105	91.401	35x95	22.5	1.5
650.0	2.7	657DCN2R7SZZ	199	170	60x60	10	1.5

© 2016 Illinois Capacitor
North America
Tel: 847.675.1760
sales@illcap.com

Asia
Tel: 852.2793 0931
sales@illcap.com.hk